# SMOKE AND HEAT CONTROL SYSTEMS

Smoke and heat control systems have the goal of eliminating and containing the spread of smoke and heat in the concerned ambient from fire by keeping a layer on the ground free of smoke.

These systems must be designed and produced in compliance with the UNI 9494 standard which distinguishes between two types of solutions:

- **NSHES NATURAL smoke and heat exhaust systems**
- **SHEVS FORCED smoke and heat exhaust systems**

In detail these systems pursue the following objectives:

- **To keep exits and access to the areas affected by the fire free of smoke;**
- **To delay and/or prevent the conditions causing the fire to spread (“flash-over”);**
- **Ease fire-fighting intervention team operations;**
- **Limit damage to systems and goods;**
- **Reduce heat demand in the structures;**
- **Reduce damages caused by toxic or corrosive substances stemming from the combustion.**

In the following pages the components for smoke and heat control will be shown, some of which are used in both natural and forced situations.

# NATURAL SMOKE AND HEAT EXHAUST DEVICES: FREE SMOKE

FREE SMOKE natural smoke and heat exhaust devices (NSHE), are one of the essential components in the natural exhaust system (NSHES).

In case of fire they allow to automatically open the skylights to extract the products generated by the combustion thus, contributing to keep a smoke free layer.

These devices can operate by temperature, via a sensor and a local energy source or by means of the equipment which can be connected to fire detection systems.

FREE SMOKE devices are designed and produced in compliance with the **EN12101-2:2005** standard and **CE certified** under the provisions of Regulation **305/11 CE, DoP**

CE

TECNOCUPOLE PANCALDI

**TECNOCUPOLE PANCALDI SPA**
Via Cà bianca, 700
40024 Castel San Pietro Terme (BO)
Tel. +39 051 6954911
Fax +39 051 6954929
www.tecnocupole.com
commercial@tecnocupole.com

| Ist.Cert.: 0407 | N.Cert.: 0407-CPD-048(IG-121-2005)/6 | UNI EN 12101-2:2004 |
|---|---|---|
| Den.Comm.: Free smoke | Matricola: | |
| Funzionamento: Automatico+manuale | Temp.avvio termico: | Res.spoiler: 10 hz |
| Re 50 | SL 500 | T (-25) | WL 1500 | B 300 | Reaz.al fuoco | Ax: |

| | | |
|---|---|---|
| 1 | COMMERCIAL NAME: | Free smoke/ Free smoke plus / Free smoke + electric semi-frame for ventilation |
| 2 | SERIAL NUMBER: | ####### |
| 3 | FUNCTIONING: | automatic / automatic + manual |
| 4 | THERMAL START UP TEMPERATURE | 68° C / 93° C / 141° C / 182° C |
| 5 | USEFUL AERODYNAMIC SURFACE | varies depending on the size of the device |
| 6 | RELIAILITY : | RE50 |
| 7 | OPENING UNDER LOAD | • SL 1000 if the geometric surface is less than or equal to 3 m2<br>• SL 500 if the geometric surface is greater than or equal to 3 m2 |
| 8 | LOW AMBIENT TEMPERATURE: | T -25° C |
| 9 | WIND LOAD: | WL 1500 |
| 10 | HEAT RESISTANCE: | B300 |
| 11 | SKYLIGHT REACTION TO FIRE: | • B-s1,d0 for polycarbonate<br>• E for Plexiglas |
| 12 | SPOILER RESISTANCE: | 10 Hz frequency |



CE
305/11/CEE
EN 12101-2:2005

# FREE SMOKE

## NATURAL SMOKE AND HEAT EXHAUST DEVICES

The FREE SMOKE device is made up of a UNI6060 natural alloy extruded aluminium (see page 32) frame and counter frame, caulk assembled, complete with three –wing aluminium hinges and stainless steel screws and rivets.

The device is opened with a three section pneumatic telescopic cylinder which operates with a mix of CO2 / OIL pivoted between two parallel brackets, a cylinder containing CO2 gas, a thermo fusible glass tube set at 68° (different settings must be specified when ordering) and a thermal valve. A further spring latch cylinder blocks the system in closed state when there is no emergency.

The above mentioned latch cylinder can be undone to open the door for periodic maintenance. The system also allows to keep the opening position even in head winds of 10 m/sec. All the cylinder feed pipes provided are in Teflon protected by double stainless steel braiding.

The opening with controlled thrust up to full opening is also guaranteed in the presence of head winds. The device can be connected to a pneumatic type remote opening system (see page 53) without the need for other accessories.

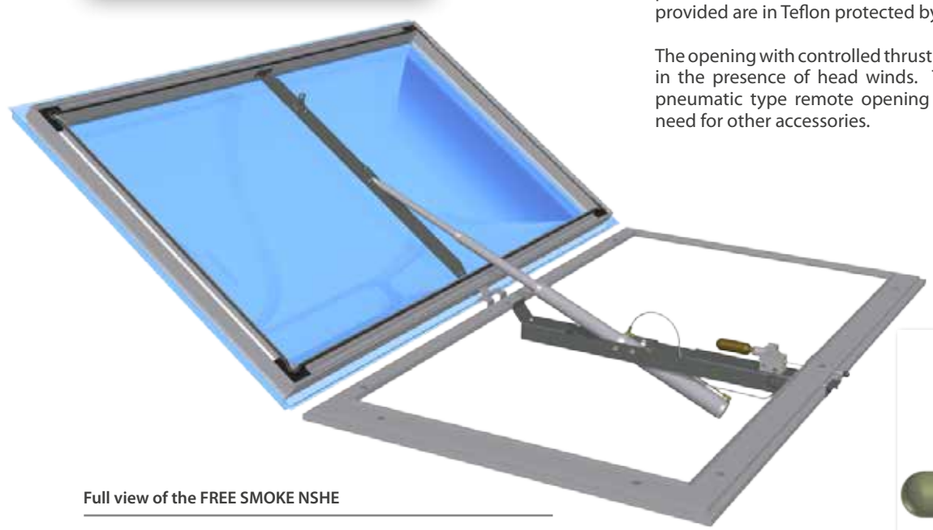

Full view of the FREE SMOKE NSHE

diagram of the FREE SMOKE NSHE device activation system

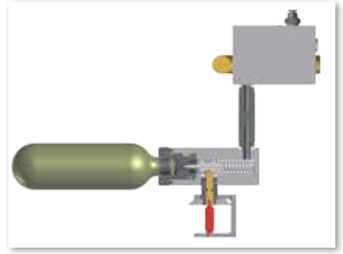

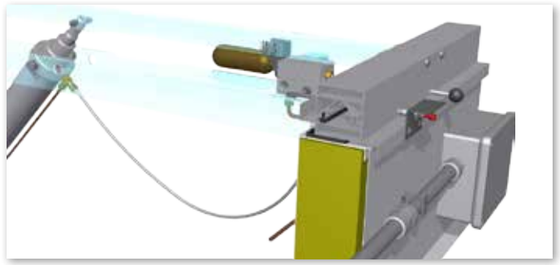

Exterior view of the pneumatic system for activating the FREE SMOKE NSHE from the ground

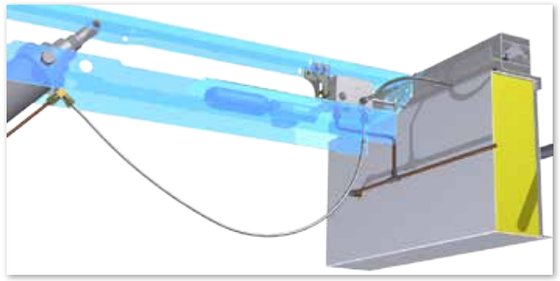

View of the inside of the pneumatic system for activating the FREE SMOKE NSHE from the ground

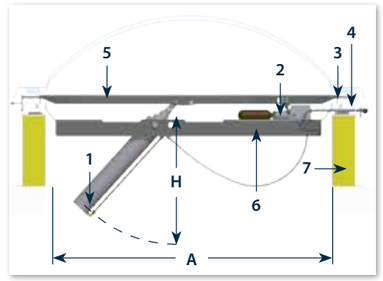


1 Three section pneumatic cylinder
2 thermal valve with CO2 gas cylinder
3 opening frame
4 fixed door
5 upper bracket
6 lower bracket
7 base

| CYLINDER OBSTRUCTION AT OPENING | |
|---|---|
| H(mm) | A - clear span (mm) |
| 355 | ≤ 860 |
| 480 | > 860 / < 1500 |
| 650 | ≥ 1500 |

# FREE SMOKE PLUS

## OPEN/CLOSE (1)

The FREE SMOKE PLUS system is made up of a frame and counter frame in UNI6060 natural alloy extruded aluminium (see page 32) caulk assembled with aluminium three part hinges and stainless steel rivets and screws.

To operate the opening are: one three bore cylinder which operates with a mix of CO2 gas / OLIO pivoted between two parallel brackets, a thermo fusible glass tube set at 68° (different settings can be specified on order) and a thermal valve. A further latch cylinder to block the system in closed state in non-emergency conditions .
The above mentioned spring latch can be used to externally open the door for periodic maintenance.
The system allows to maintain the opening position even when there are head winds of 10 m/sec.
All the cylinder feed pipes are in Teflon with double stainless steel braiding.

The opening with controlled thrust up to full opening is also guaranteed in the presence of head winds. The device can be connected to a pneumatic type remote opening system (see page 53) without the need for other accessories.
The cylinder 'double effect' function and the thermal valve allow to re-close from the floor.

The device is connected
to the ground control box
(see page 53).

CE
305/11/CEE
EN 12101-2:2005

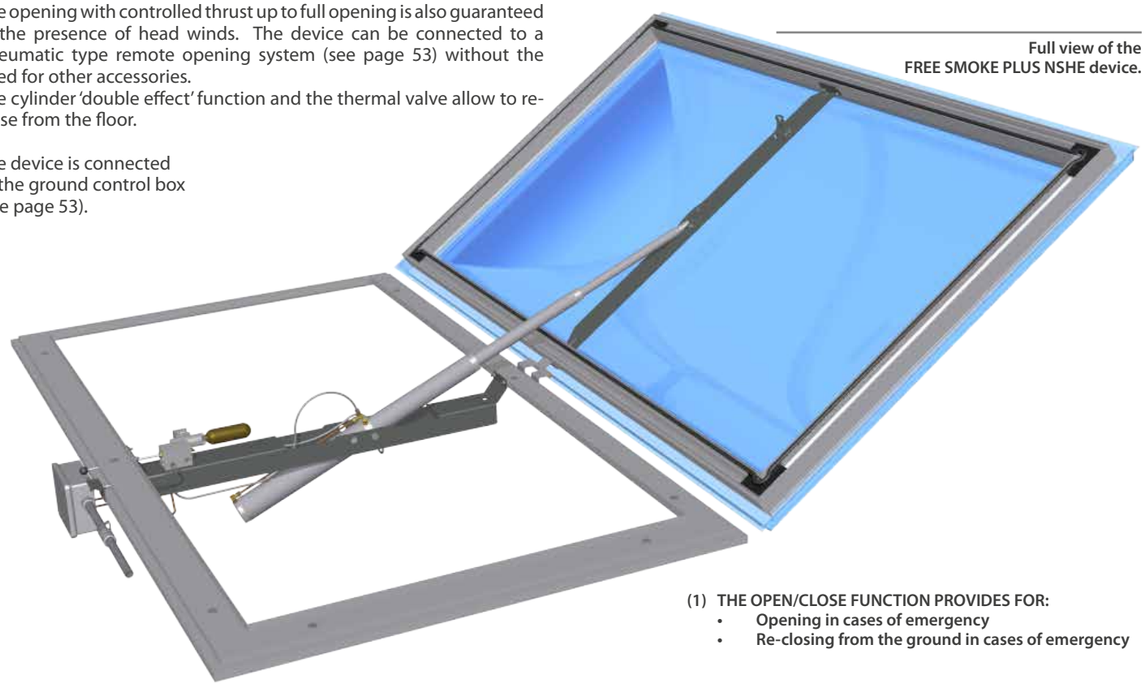

Full view of the
FREE SMOKE PLUS NSHE device.

(1) THE OPEN/CLOSE FUNCTION PROVIDES FOR:
- Opening in cases of emergency
- Re-closing from the ground in cases of emergency

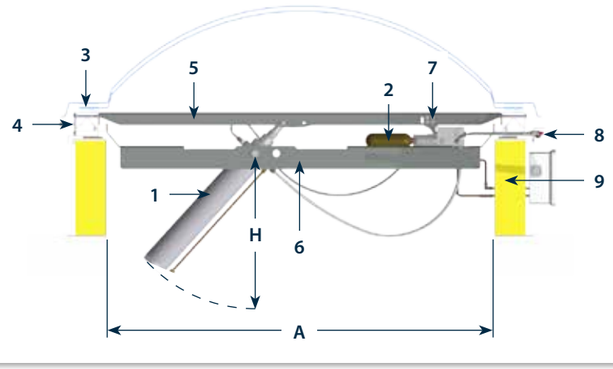


1 three section pneumatic cylinder
2 thermal valve with CO2 gas cylinder
3 opening frame
4 fixed door
5 upper bracket
6 lower bracket
7 matching part
8 inspection pole
9 base

| CYLINDER OBSTRUCTION AT OPENING | |
|---|---|
| H(mm) | A – clear span (mm) |
| 355 | ≤ 860 |
| 480 | > 860 / < 1500 |
| 650 | ≥ 1500 |



# FREE SMOKE
# + ELECTRIC SEMI-FRAME

## FOR DAILY VENTILATION

The FREE SMOKE device is made up of a UNI6060 natural alloy extruded aluminium frame and counter frame, caulk assembled, complete with three –wing aluminium hinges and stainless steel screws and rivets.
The device is opened with a three section pneumatic telescopic cylinder which operates with a mix of CO2 / OIL pivoted between two parallel brackets, a cylinder containing CO2 gas, a thermo fusible glass tube set at 68° (different settings must be specified when ordering) and a thermal valve.
A further spring latch cylinder blocks the system in closed state when there is no emergency
The above mentioned latch cylinder can be undone from the outside to open the door for periodic maintenance.
The system also allows to keep the opening position even in head winds of 10 m/sec.
All the cylinder feed pipes provided are in Teflon protected by double stainless steel braiding.
The opening with controlled thrust up to full opening is also guaranteed in the presence of head winds.
The device can be connected to a pneumatic type remote opening system (see page 53) without the need for other accessories.
By adding an electric actuatorised door to the frame, the skylight can also be opened for daily ventilation.

CE
305/11/CEE
EN 12101-2:2005

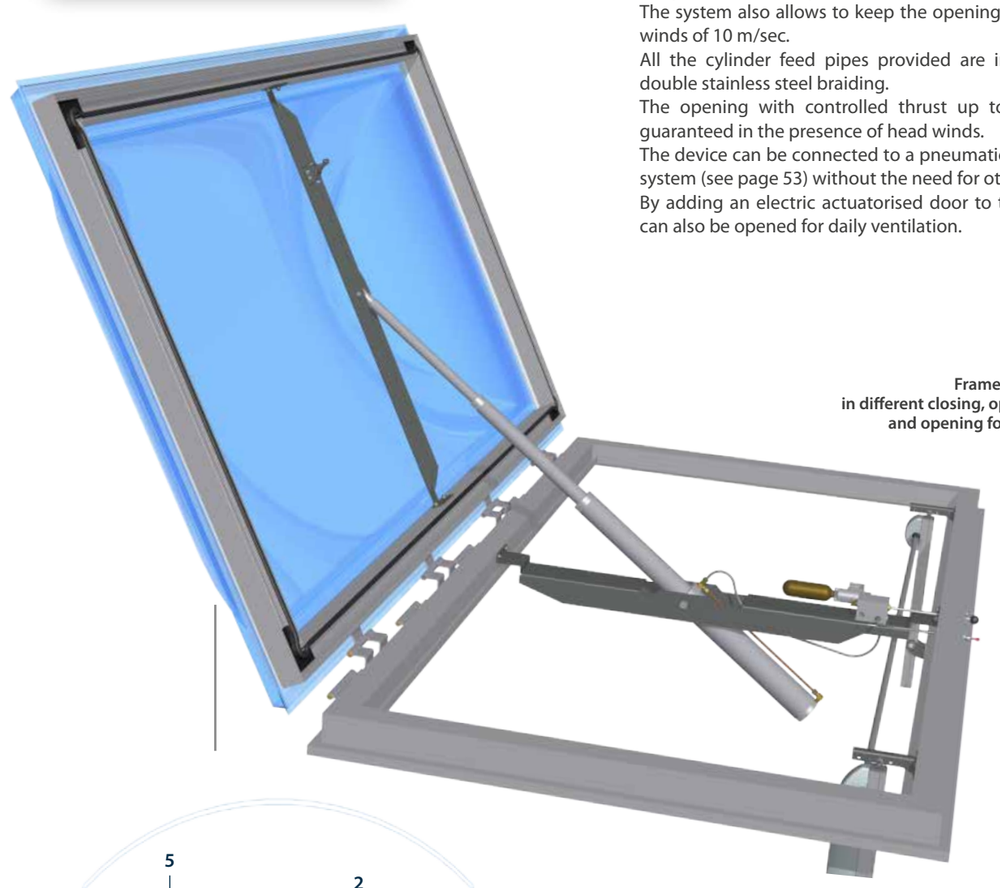

Frame + semi-frame section
in different closing, opening for ventilation
and opening for extraction positions

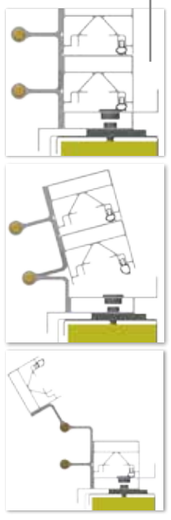

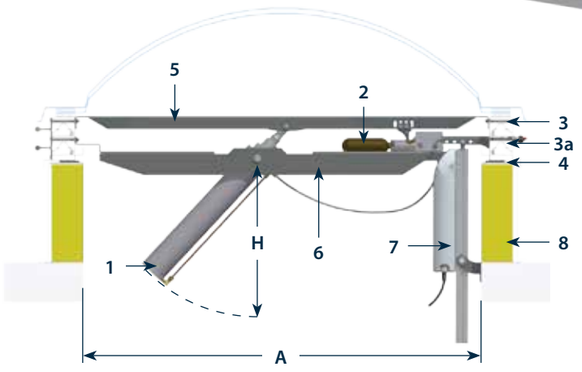


1 three section pneumatic cylinder
2 thermal valve with CO2 gas cylinder
3 opening frame for smoke and heat extraction
3a opening frame for ventilation
4 fixed door
5 upper bracket
6 lower bracket
7 electric actuator
8 base

| CYLINDER OBSTRUCTION AT OPENING | |
|---|---|
| H(mm) | A – clear span (mm) |
| 355 | ≤ 860 |
| 480 | > 860 / < 1500 |
| 650 | ≥ 1500 |

# NATURAL SMOKE AND HEAT EXHAUST DEVICES: FREE SMOKE LIGHT

FREE SMOKE LIGHT natural smoke and heat exhaust devices (NSHE), are one of the essential components in the natural exhaust system (NSHES) .

They are available in single or double flap versions to reach larger areas and can also be accessorized with an electric actuator for room ventilation.

FREE SMOKE devices are designed and produced in compliance with the EN12101-2:2005 standard and CE certified under the provisions of Regulation 305/11 CE, DoP

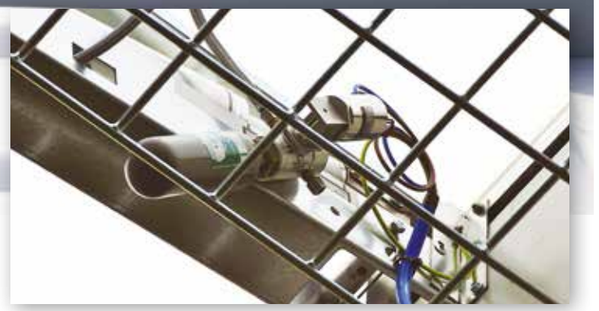

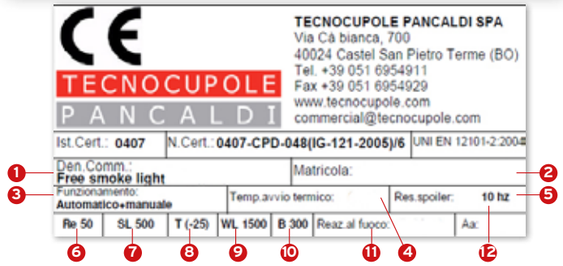


| | | |
|---|---|---|
| 1 | COMMERCIAL NAME: | FREE SMOKE LIGHT / 1 FLAP/ 2 FLAPS |
| 2 | SERIAL NUMBER: | ####### |
| 3 | FUNCTIONING: | automatic / automatic + manual |
| 4 | THERMAL START-UP TEMPERATURE:: | 68° C / 93° C / 141° C / 182° C |
| 5 | USEFUL AERODYNAMIC SURFACE | varies depending on the size of Aa the device |
| 6 | RELIABILITY : | RE 50 |
| 7 | OPENING UNDER LOAD: | SL 500 (single flap) SL 800 (double flap) LOW 0° C |
| 8 | LOW AMBIENT TEMPERATURE: | T 0° C |
| 9 | WIND LOAD | WL 1500 |
| 10 | HEAT RESISTANCE: | B 300 |
| 11 | SKYLIGHT REACTION TO FIRE: | • B-s1,d0 for polycarbonate • E for Plexiglas |
| 12 | SPOILER RESISTANCE: | 10 Hz frequency |



CE
305/11/CEE
EN 12101-2:2005

# FREE SMOKE LIGHT

## SINGLE FLAP

The FREE SMOKE LIGHT/1 system is made up of a frame and counter frame in UNI6060 natural alloy extruded aluminium (see page 32) caulk assembled with aluminium three-wing hinges and stainless steel rivets and screws.
To operate the opening are:

- a double effect pneumatic cylinder only for opening or open/close is connected to a remote system pivoted between two parallel hinges,
- a cylinder containing CO2 gas,
- a thermo fusible glass tube set at 68°,
- a thermal valve.

The closing block on the flap allows to open the door from the outside for periodic maintenance.
All the cylinder feed pipes are in Teflon with double stainless steel braiding.

The device can be connected to a pneumatic type remote opening system (see page 53) without the need for other accessories.
The device can be used for daily ventilation by installing a 230V, 300 mm stroke electric actuator, optional.

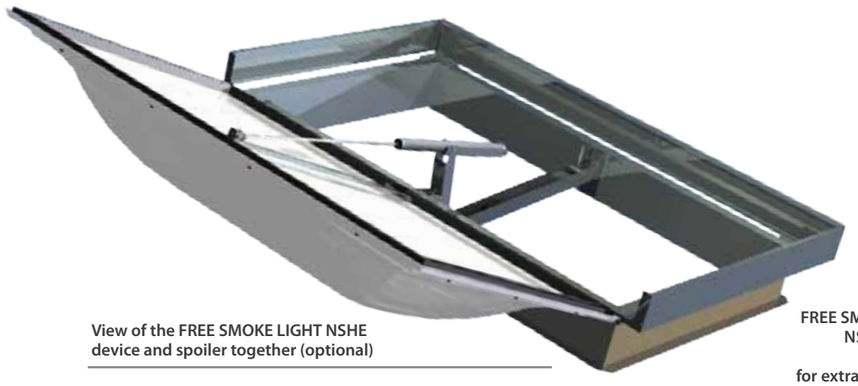

View of the FREE SMOKE LIGHT NSHE device and spoiler together (optional)

FREE SMOKE LIGHT NSHE DEVICE when open for extraction detail

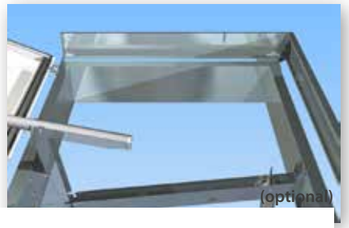


Detail of the FREE SMOKE LIGHT NSHE device open for extraction with the position of the electric actuator for ventilation highlighted

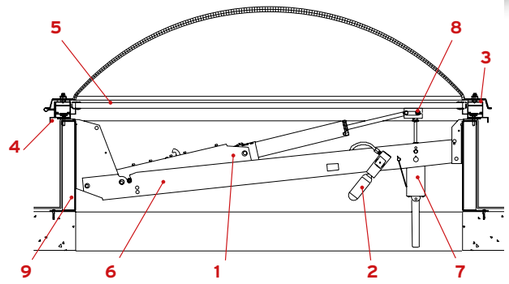


1 **double effect pneumatic cylinder**
2 **thermal valve with CO2 gas cylinder**
3 **opening frame for smoke and heat extraction**
4 **fixed door**
5 **upper bracket**
6 **lower bracket**
7 **actuator (optional)**
8 **actuator release system (optional)**
9 **base**

# FREE SMOKE LIGHT

## DOUBLE FLAP

The FREE SMOKE LIGHT/1 system is made up of a frame and counter frame in UNI6060 natural alloy extruded aluminium (see page 32) caulk assembled with aluminium three-wing hinges and stainless steel rivets and screws.
To operate the opening are:
- a double effect pneumatic cylinder only for opening or open/close (when connected to a remote system) pivoted between two parallel hinges,
- a cylinder containing CO2 gas,
- a thermo fusible glass tube set at 68° (different settings can be specified at time of order),
- a thermal valve.

The closing blocks on the flap allow to open the door from the outside for periodic maintenance.
All the cylinder feed pipes are in Teflon with double stainless steel braiding.
The device can be connected to a pneumatic type remote opening system (see page 53) without the need for other accessories.
The device can be used for daily ventilation by installing a 230V, 300 mm stroke electric actuator, optional.

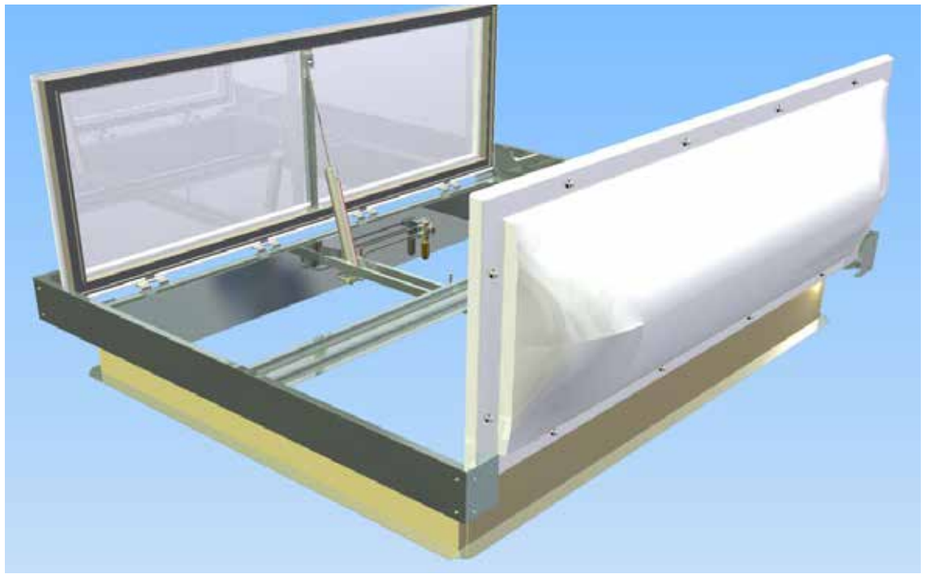

Full view of the FREE SMOKE LIGHT NSHE double flap device

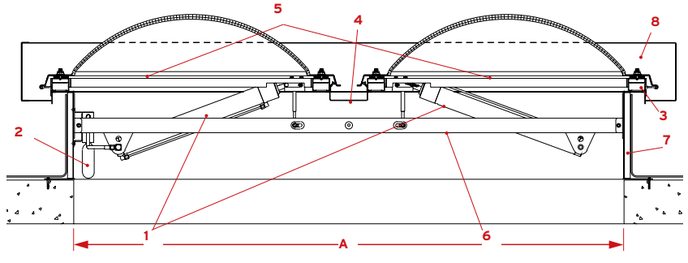


1 double effect pneumatic cylinder
2 thermal valve with CO2 gas cylinder
3 opening frame for smoke and heat extraction
4 central flap separator
5 upper bracket
6 lower bracket
7 base
8 spoiler

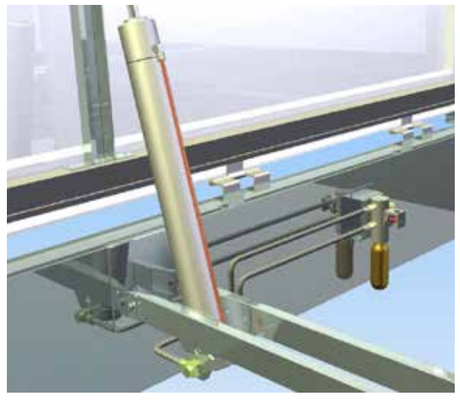

view from inside the FREE SMOKE LIGHT NSHE double flap device

# FREE SMOKE GLASS

FREE SMOKE GLASS is a natural smoke and heat exhaust device NSHE made with extruded aluminium thermal break profiles, painted in standard RAL colours.

The structure for the openable frame must guarantee a frame insert of at least 13mm, with a field of use on slopes with gradients from 7° to 75°.
All the seals come in elastomer (EPDM).
The profiles shown allow a door opening of approx. 90° with the opening of the hinges on the sloping side inclined "downsteam".

The opening device is made up of a SINGLE C SECTION/BLOCKS with a span of 740 mm pneumatic cylinder pivoted between two parallel brackets orthogonal to the galvanised steel 40/10 thickness hinge side, thermal valve with spring latch to hold the mobile door, thermo sensitive tube and 60 gram CO2 cylinder.

A seal is inserted to avoid contact between the upper bracket and the glass.
The opening position is pneumatically guaranteed even in the presence of head winds.

All the cylinder feed pipes are in Teflon with double stainless steel braiding

The NSHE is re-closed manually from the outside of the frame.

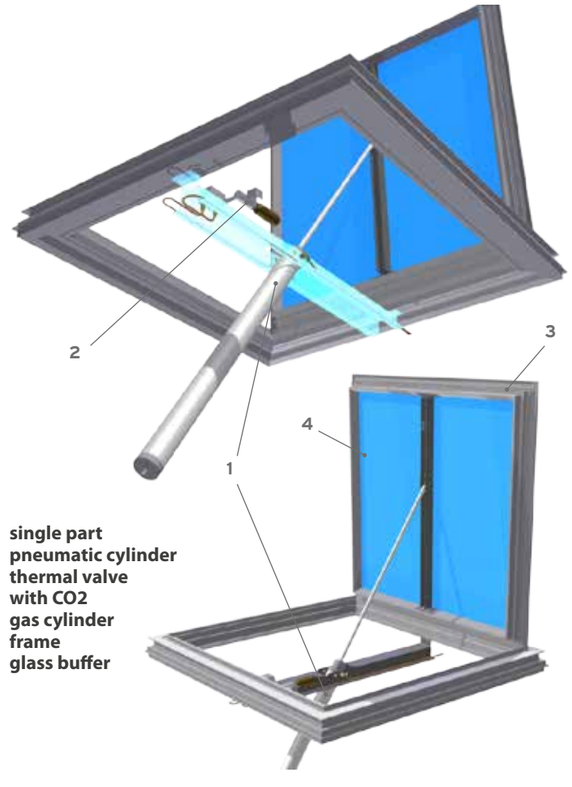


1 single part pneumatic cylinder
2 thermal valve with CO2 gas cylinder
3 frame
4 glass buffer

# BLIND PANEL

Blocking element placed flat and made with a 20 mm thick panel in sintered extruded polystyrene covered by two flat surfaces in steel plate.
Pre-painted in white/grey
The panel is fixed to the mobile frame by means of an angular profile.

# SPOILER

## TO INCREASE THE USEFUL AERODYNAMIC SURFACE AA

Vertical spoiler, 200 mm in height positioned on 3 sides of the NSHE made in steel plate, connected to the fixed door of the NSHE via suitable spacers complete with stainless steel screws.

The SPOILER can be used with the following products:
- FREE SMOKE
- FREE SMOKE PLUS,
- FREE SMOKE + ELECTRIC SEMI-FRAME
- FREE SMOKE LIGHT SINGLE AND DOUBLE FLAP

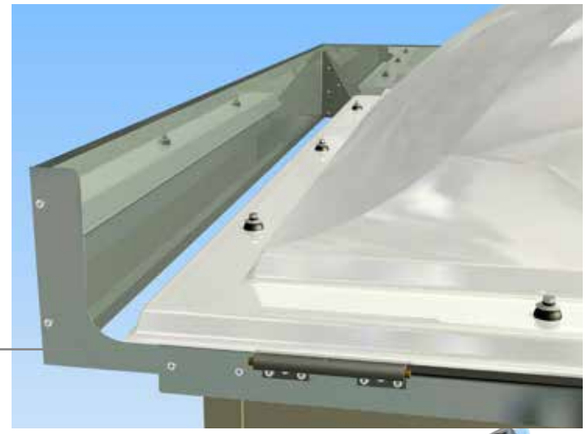

View of the spoiler
in closed extraction status

View of the spoiler
in open extraction status

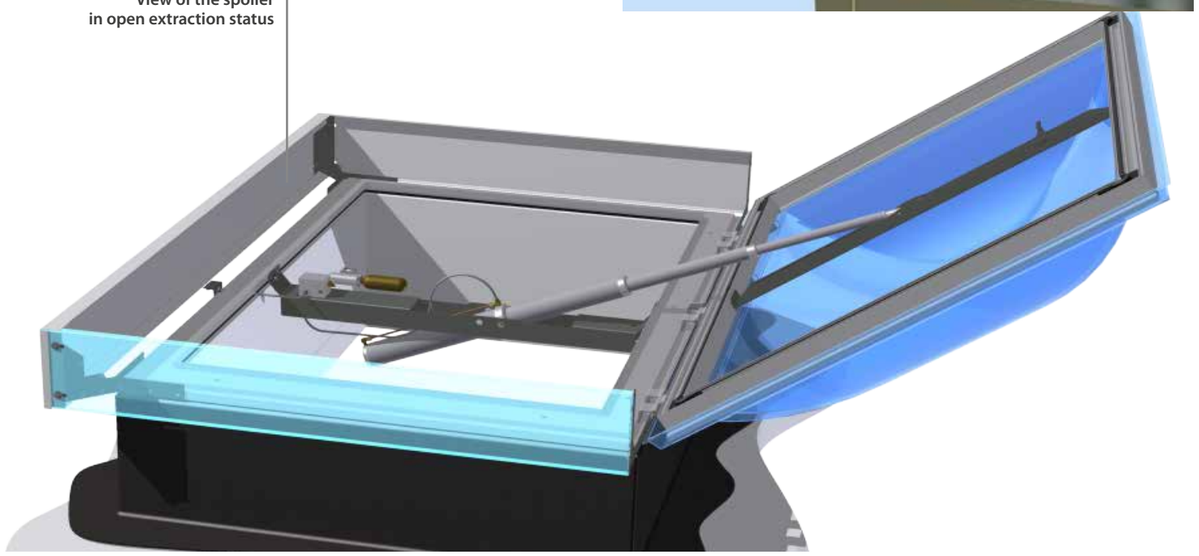



CE
305/11/CEE
EN 12101-2:2005

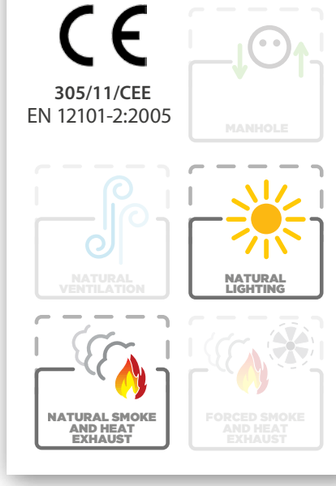


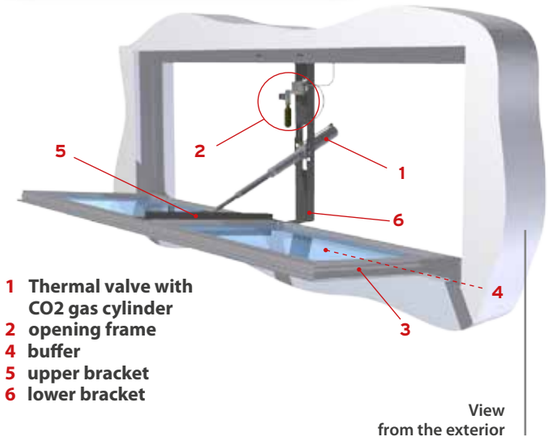


1 **Thermal valve with CO2 gas cylinder**
2 **opening frame**
4 **buffer**
5 **upper bracket**
6 **lower bracket**

View
from the exterior

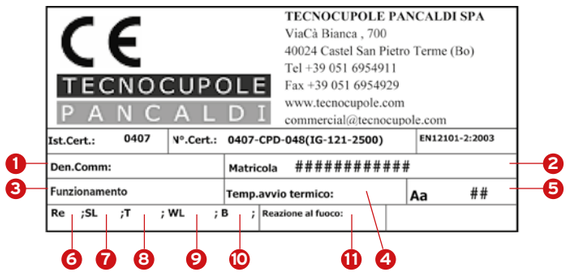


| | | |
|---|---|---|
| 1 | COMMERCIAL NAME: | Free smoke V / V PLUS |
| 2 | SERIAL NUMBER | ####### |
| 3 | FUNCTIONING: | automatic / automatic + manual |
| 4 | THERMAL START-UP TEMPERATURE: : | 68° C / 93° C / 141° C / 182° C |
| 5 | USEFUL AERODYNAMIC SURFACE Aa | varies depending on the size of Aa the device |
| 6 | RELIABILITY' : | RE 50 |
| 7 | OPENING UNDER LOAD: | SL 0 |
| 8 | LOW AMBIENT TEMPERATURE: | T -25° C |
| 9 | WIND LOAD: | WL 1500 |
| 10 | HEAT RESISTANCE: | B 300 |
| 11 | SKYLIGHT REACTION TO FIRE | B-s1,d0 for polycarbonate |

# FREE SMOKE V

## FSV09 VERTICAL NATURAL SMOKE ND HEAT EXHAUST DEVICE

Openable external vasistas vertical windows made in cold drawn profile or thermal break extruded aluminium EN AW 6060, silver in colour. The windows come with seals and a honeycomb block which can be altered to customer requirements and suitable fixing.

To open the device are: a multi thrust pneumatic cylinder pivoted between two parallel brackets, a thermo valve with holding spring latch, a cylinder containing CO2 gas and a thermo fusible glass tube set at 68° (different settings must be specified when ordering) .

All the cylinder feeding pipes are in Teflon protected by double stainless steel braiding. There is a flexible cable at the end of the spring latch to manually unhook the door from the outside for periodic NHSE maintenance purposes.

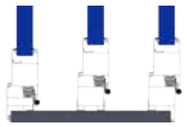

cold drawn profile
in external rabbet
the open
and internal rabbet

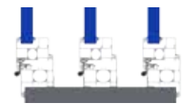

thermal cut profile
in external rabbet
in the open
and internal rabbet

# FREE SMOKE V PLUS

## OPEN/CLOSE (1)

Under extraction conditions, the option to reclose from the floor is provided by the "double effect" function of the cylinder and the thermal valve.

(1) THE OPEN/CLOSE FUNCTION IS INTENDED FOR:
- Opening in emergencies
- Re-closing from the floor in emergency conditions

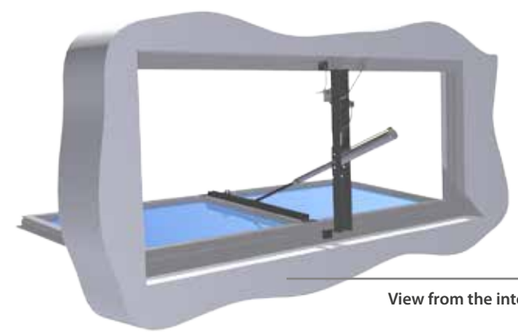

View from the interior

# FREE SMOKE AIR

## FRESH AIR EMISSION FROM BELOW

The FREE SMOKE AIR device is made using thermal break aluminium profiles complete with glazing beads and seals with a blind block made of white/grey pre-painted steel sheet with a sandwich insulation panel.

The external vasistas opening comprises a gas spring and two hydraulic springs to control the door in cases of falls up to 90° .

The unhooking device follows an electrical command to “shunt trip” coming from the main system control panel. Re-arming is done manually from a nearby position.

Supply is completed with suitable fixing sets.

The FREE SMOKE AIR device can be accessorized by a door foot support kit in the open position and finishing flashings.

Applicable corrective factor: 0,65
According to chart 3 UNI9494-1:2012 Para. 6.7

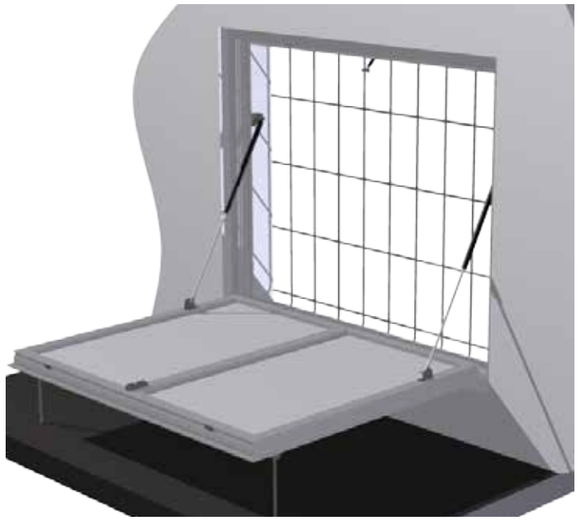

Exterior view of the FREE SMOKE AIR device (optional grid)

View of FREE SMOKE AIR device closed (external/internal)

## NSHE SYSTEM CONNECTION LINES AND COMMAND PANELS

In accordance with the UNI 9494-1:2012 standard, the devices that make up the natural smoke and heat exhaust system NSHES must be connected and controlled by power supply lines and dedicated command and control panels.

Tecnocupole Pancaldi offers connection lines and pneumatically powered supply boards and electricity line boards.

In the following pages the control and command lines and panels for electrical and pneumatic power and any accessories to be installed on the NSHE will be described.

# NSHES CONTROL AND MANAGEMENT UNIT

Control and management unit for NSHES activation with activation cycle.
The unit moves the NSHES components from vigilance state into fire-fighting position via signals coming from the smoke detector system (relay contact) or manual.

The unit is programmed according to the activation sequence provided in the design and can manage output signals both by compartment or common to the whole area.

It is possible to program delayed activation signals (up to a max. of 5 minutes – UNI 9494-1:2012 para.6.9.6.2); during this delay it is possible to abort the fire-fighting action by pressing the reset.

If the alarm coming from the smoke detection system persists then the fire-fighting sequence is once again activated.

Back-up batteries for supporting the signal from the unit and where needed power supply to activate the electromagnetic actuators in the NSHES components are included.

Container size 300x400 mm 225 mm depth.

Protection IP66 – continuous functioning temperature -40°C +80°C (120°C for short periods).

The unit can be programmed from the 4x20 display, multi-task operating system, application software with the option of managing up to 16 digital + 2 analogue inputs, 12 assignable relay outputs for 1-6 zones, memory for up to 50 events..

Front view of the NSHES control unit

Picture of the inside of the NSHES control unit

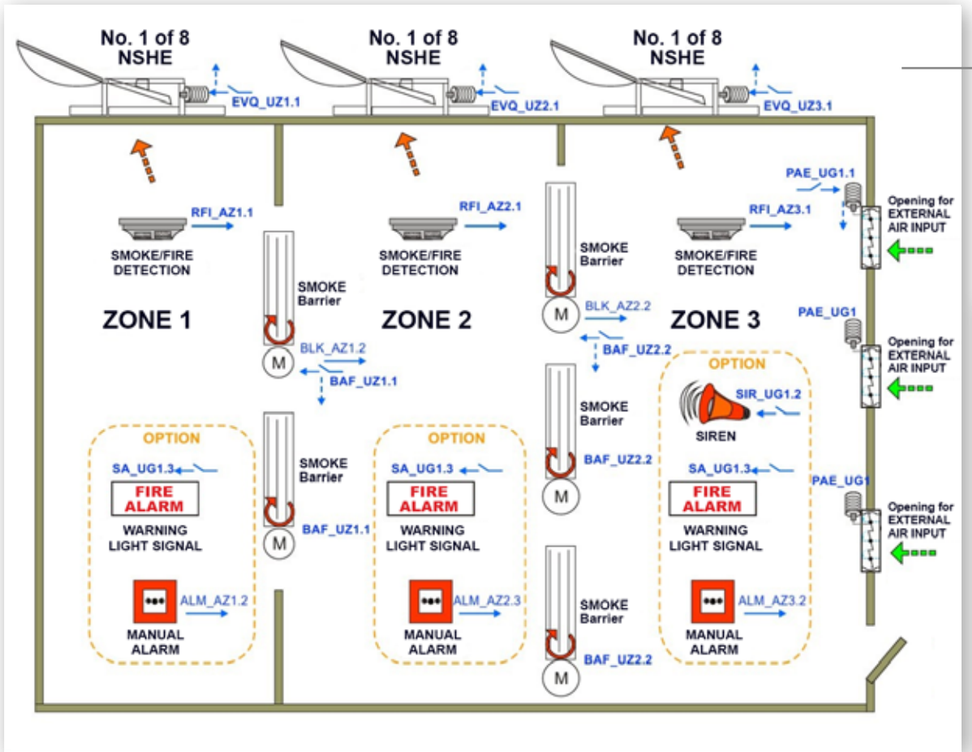


Example of control chart of an area divided into 3 zones

LEGEND

**PAE**_(U/A) (Z/G) N. n
*Element acronym*

PAE_**(U/A)** (Z/G) N. n
*U = Command A= Acquisition*

PAE_(U/A) **(Z/G)** N. n
*Z = Zone, G = Common part*

PAE_(U/A) (Z/G) **N.** n
*Zone number/common part*

PAE_(U/A) (Z/G) N. **n**
*element no.*

*Acquisition*

*Command*

*Same Command to following elements*



# PNEUMATIC CONNECTION LINES

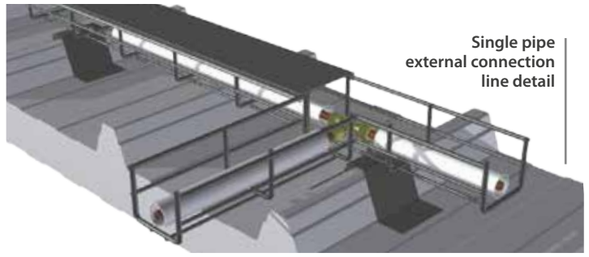

Single pipe external connection line detail

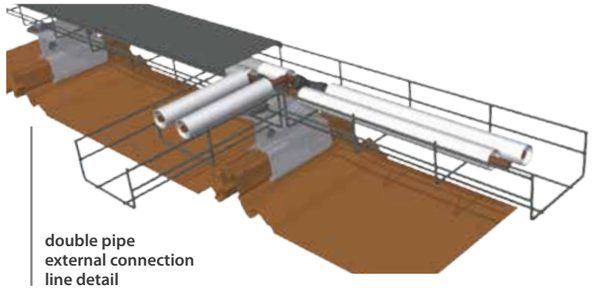

double pipe external connection line detail

Examples of internal connection lines

The NSHEs must have a suitable input for the pneumatic connection with the boxes on the ground in the thermo system.

This input must allow to open the NSHE without involving the emergency device with which it is fitted comprising a thermo fusible tube and a CO2 cylinder.

In this way it isn't necessary to replace the above-mentioned components whereas in other cases this would need to be replaced when the electrical grounding emergency system is installed.

The advantages gained by using this system are:
• Zero costs for replacing used components,
• Possibility of periodically keeping system efficiency under control by the reading on the manometer and the signal control lights on the NITROGEN BOX panel,
• High reliability (removes unwanted opening risks in the electrical emergency system).

The connection line can be made up of one or two pipes depending on the NSHE be it only OPEN or OPEN/CLOSE, in this case with the two pipe system it is also possible to command the re-closing of the NSHE from the ground in emergency opening conditions.

Furthermore, the line can be installed either inside or outside the covered rooms.

The connection line between the NSHE and the command panel consists of a backbone with one or two copper 6 mm internal / 8 mm external diameter pipes connected by chrome plated brass fixtures.

The connection between the backbone and NSHEs is made via Teflon pipes with internal diameter of 2 mm / external diameter of 4 mm protected by double stainless steel braiding.

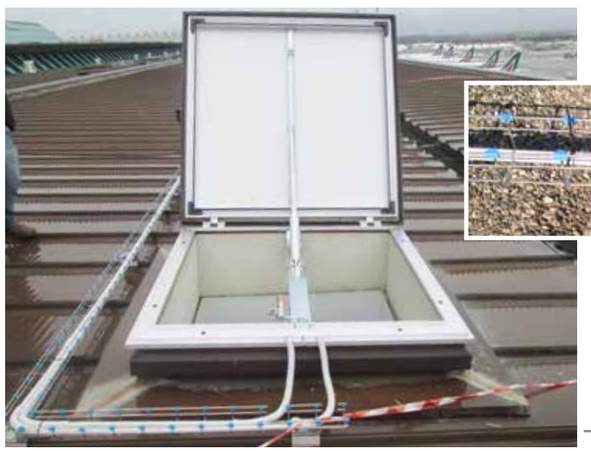

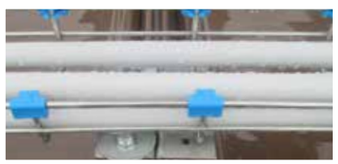

The wall fixing comprises suitable brackets anchored to blocks or screws on the lower surface of the cover.

In the case of external systems, the line described above is inserted inside a PVC pipe.
The latter is fixed by means of forks inside an inspection duct anchored to the cover by suitable supports.

Examples of external connection

# PNEUMATIC B1/B2 NITROGEN BOX

## NSHE COMMAND PANEL

This command panel has been designed for installations inside buildings and consists of a box with lock which is 650x405x200 mm in size on the front of which is an alarm button and a LED signal panel.
On the upper part of the box are the outputs for the connections to the pneumatic connection lines.

Inside the box are the following:
a cylinder of nitrogen with appropriate capacity to open a maximum of 10 NSHEs, a manometer, a pressure regulator and an electro-valve.
Furthermore, the BOX is fitted with a back-up battery which must be connected to the network for maintaining the load status (connection to be done by electrical plant engineer).

The command panel can be connected to additional remote alarm buttons (if connected in parallel on the glass breakage button on the front of the box) and for receiving smoke detection alarm signals from an external switchboard.

Picture of the inside of the nitrogen command panel

Front view of the nitrogen command panel

1 Disconnected or broken smoke sensor lines
2 Switchboard powered by mains at 220V
3 Switchboard powered by back-up battery (in the absence of 220V mains)
4 Fire/smoke alarm. SHEV in emergency opening
5 SHEVS all open signal
6 SHEVS all closed signal
7 Back-up battery recharge
8 Nitrogen cylinder empty - replace
9 Glass breakage button active
10 SHEV in opening signal
11 Open/close external command Active (only operates on B2)

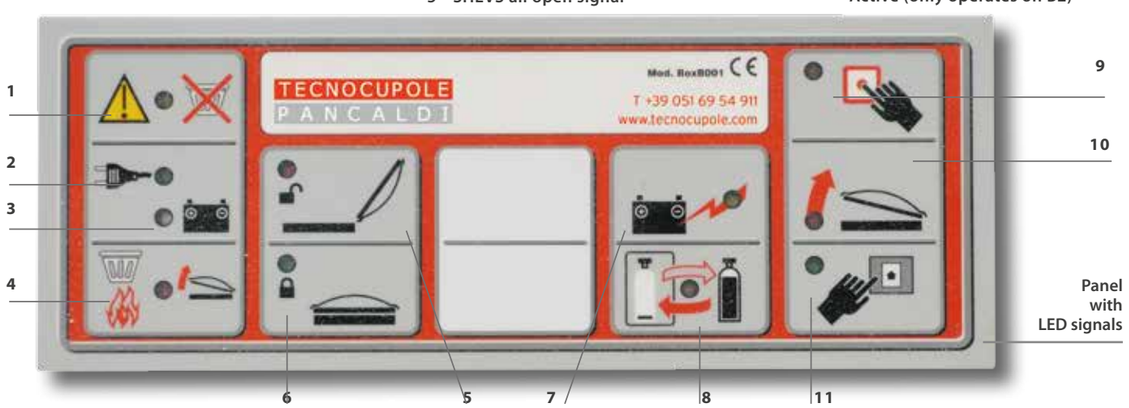


Panel with LED signals



# PNEUMATIC - CO2 BOX

## NSHE COMMAND PANEL

This command panel designed for installation inside a building comprises a metal container with lock and from one to two carbon dioxide cylinders with enough capacity to activate the connected user stations.

The container size can vary as follows:
height from 345 to 700 mm,
base from 255 to 560 mm,
depth 105 mm

The command panel can receive signals from alarms coming from an external smoke detection switchboard.

Front view of CO2 command panel

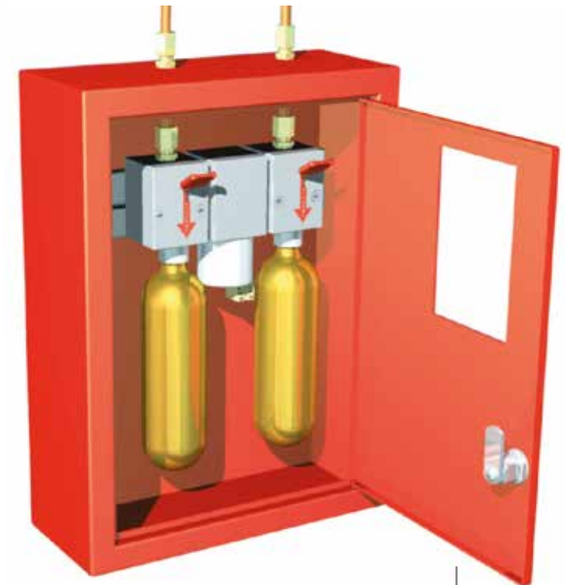

Inside the two CO2 cylinder command panel OPEN/CLOSE

Inside the one CO2 cylinder command panel OPEN only

Emergency button

# ELECTRIC SINGLE AREA ERC BOX

## NSHE COMMAND PANEL

This command panel designed for installation inside buildings comprises a “box” with lock inside which is a switchboard that supplies electrical power to the actuators installed on the NSHE.

The switchboard comprises a power supply and two back-up batteries. The cabling system must be sized in accordance with the number of actuators and the length of the line.
The connection of the command panel to the network line and between the NSHEs and command panel is carried out by an electrical plant engineer.
The lines must be made with cables which are fire resistant or suitably protected with non –combustible materials.

The fire resistance of the cables must be in compliance with CEI EN 50200 for 30 minutes and conform to CEI 20-105 (UNI 9494-1:2012 parag. 6.9.4.4.).

Activation takes place by breaking the glass over the button which is supplied separately to the box. The command panel can be interfaced with the smoke detection system.

Possibility to connect:
- max 10 outgoing actuators in parallel
- smoke detectors
- incoming glass breakage buttons

Emergency glass breakage button

Front view
of the Single Area
ERC box

# NSHE INSTALLATION ACCESSORIES

## WHEN THERE ARE ELECTRICAL CONNECTION LINES

When there are electrical connection lines between the command panels and the NSHEs, the latter must be accessorized with a local actuator which, on receiving the electrical impulse from the command panel as a result of pushing the button after breaking the glass or from the smoke detector system that triggers the opening of the NSHE causing the thermo fusible glass tube to break.

Pyrotechnic actuator
installed on thermal valve

## PYROTECHNIC ACTUATOR

It is made up of a cylinder inside which is housed a small explosive charge containing a resistance.
When the current goes through the actuator it expels a firing pin that causes the thermo fusible tube to break and thus, trigger the opening of the NSHE.

The pyrotechnic actuator must be replaced after use

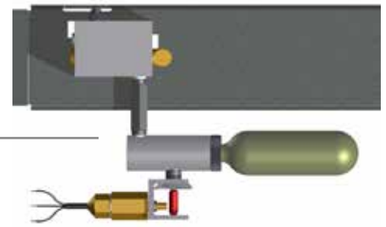

Intact system

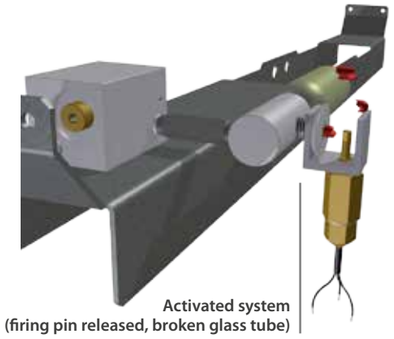

Activated system
(firing pin released, broken glass tube)

Electromagnetic actuator
nstalled on thermal valve

## ELECTROMAGNETIC ACTUATOR

This comprises a mechanical system driven by an electro magnet which allows the triggering of the NSHE opening cycle by means of breaking the thermo fusible glass tube.
The system functions as a “shunt trip”.

After using the electromagnetic actuator does not need replacing but must be re-armed.

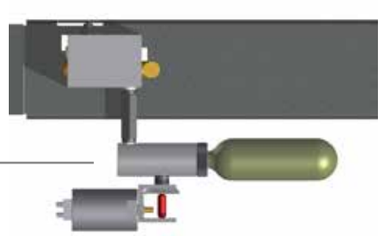

Intact system

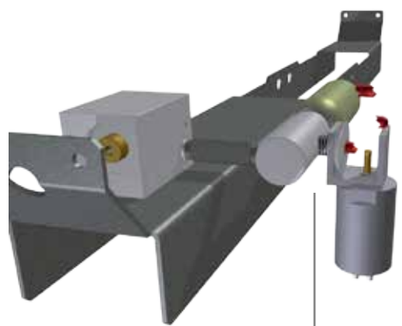

Activated system
(firing pin released, broken glass tube)

# FREE SMOKE CURTAIN

Smoke barriers are one of the main components of natural and forced smoke and heat exhaust ventilation systems (NSHES and SHEVS).
According to the UNI 9494-1:2012 standard, smoke barriers are elements that cordon off the ceilinged area inside a building.

The smoke area must be made in such way as to contain the fumes where the fire has broken out by impeding it to enter surrounding areas.

In this way emergency operations and evacuation of the rooms can take place in conditions of greater safety and visibility and can reduce damage to goods.

The FREE SMOKE CURTAIN barriers are CE Certified under the provisions of Regulation (EU) N.305/2011, and conform to the EN 12101-1:2006 standard.

Multiple roller barrier detail
For widths greater than 7 metres

# FREE SMOKE CURTAIN-M

## MOBILE SMOKE BARRIER

The FREE SMOKE CURTAIN-M mobile smoke barriers for mounting on the ceiling are made of sheets of cladded fibre glass textile and steel wires. The white sheets are fixed overhead with a galvanised steel shaped upper structure .
Mounting can be carried out with or without side rails.

The sheets are wrapped around one or more rollers depending on whether it is a single or multiple configuration. In the latter case the overlay of the textile forms a continuous barrier. The rollers are housed inside a galvanised steel sheet carter.
The maximum height of a barrier is 10 metres.

The curtain is moved and managed by a control unit which on receiving an alarm or power cut signal, automatically drops the curtain.
Descent is assisted by a 24V tubular motor for rewinding the sheets inserted into the rollers.

Single roller barrier detail
For widths up to 7 metres

# FREE SMOKE COURTAIN-F

## FIXED SMOKE BARRIER

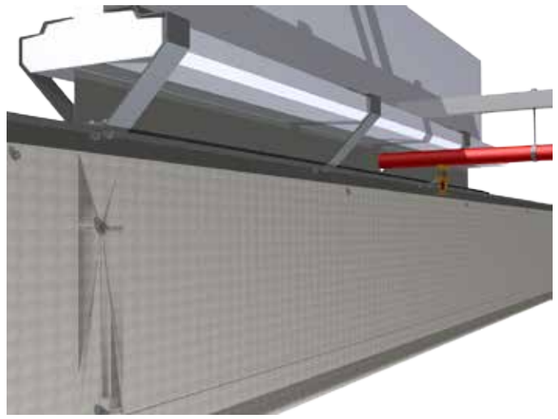

Fixed barrier fixing system detail in the presence of systems

The FREE SMOKE CURTAIN-M mobile smoke barriers for mounting on the ceiling are made of sheets of cladded fibre glass textile and steel wires. The white sheets are fixed overhead with a galvanised steel shaped upper structure.

A pocket for inserting the tubular curtain tensioning is on the base.

Special steel wire is used for sewing the sheets; the barrier panels are joined by means of galvanised steel plates and suitable fixings. Mounting takes place without side rails.

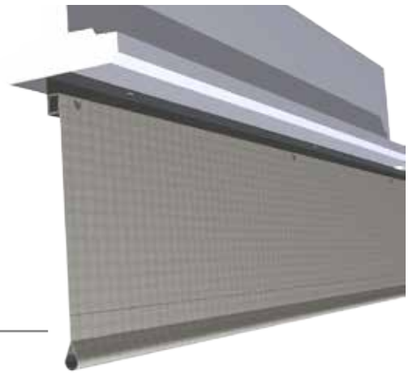

Fixed barrier under beam fixing system detail

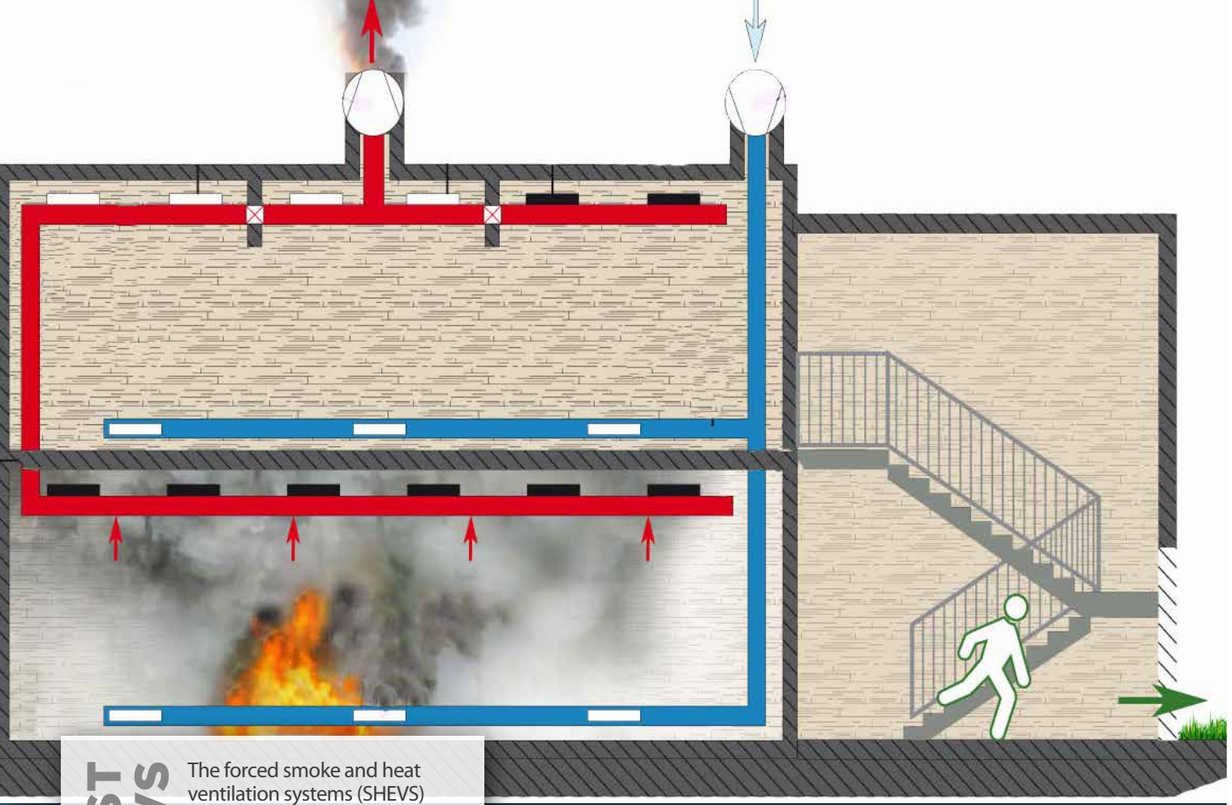

Diagram of the FREE SMOKE VENT device activation system.

# FORCED SMOKE AND HEAT EXHAUST SYSTEMS SHEVS

The forced smoke and heat ventilation systems (SHEVS) are complementary to natural smoke and heat exhaust ventilation systems (NSHES) and provide an alternative when there are structural restraints.
For example: in the case of a multi-storey building or areas affected by the intervention which are in the basement.

Forced exhaust ventilation systems are designed by following principles that are similar to those for natural systems hence, these also demand the installation of several components, some of which are used in the natural system:
floor release fresh air devices (see page 50),
smoke containment curtains (see pages 58-59).

The basic difference to natural systems is that the evacuation of the fumes from the fire comes from electrically actuatorised fans.
Tecnocupole Pancaldi offers Free Smoke Vent devices with CE product certifications in accordance with the UNI EN 12101-3:2004 standard and under the provisions of European Regulation 305/2011.

CE

305/11/CEE
EN 12101-3:2004

# FREE SMOKE VENT

## SMOKE AND HEAT EXTRACTORS

They are a subset of a larger range of fans certified in compliance with the EN 12101-3: 2004 standard and able to operate at +300°C for 2 hours or +400°C for 2 hours.

The structure is entirely made of steel making the extractor strong and durable, the axial type fan is made in die-cast aluminium. The totally closed actuators have ball bearings for guaranteeing a long life.

Protection rating IP55.

These products have been designed to be used in buildings such as: shopping malls, stairwells, closed garages, underground stations.

### F300 (300° 2H), SHORT BODY (FUNCTIONING ONLY IN EMERGENCIES S2)

| DESCRIPTION | Diameter | POLES | Nominal Power | Actuator size | Max capacity | Sound pressure level | available versions | |
|---|---|---|---|---|---|---|---|---|
| | mm | | kW | | m3/h | dBA @ 3m max | F300 (300° C 2h) | F400 (400° C 2h) |
| FSVENT400/2 | 400 | 2 | 1,32 | 80 | 7740-8280 | 70 | sì | sì |
| FSVENT450/3 | 450 | 2 | 2,64 | 90L | 12240 | 77 | sì | no |
| FSVENT500/4A | 500 | 2 | 3,45 | L90L | 15660 | 74 | sì | no |
| FSVENT500/4B | 500 | 2 | 4,6 | 100L | 17820 | 76 | sì | no |
| FSVENT400/4 | 400 | 4 | 0,66 | 80 | 4680 | 56 | sì | sì |
| FSVENT450/4 | 450 | 4 | 0,66 | 80 | 6840 | 61 | sì | sì |
| FSVENT500/4 | 500 | 4 | 0,66 | 80 | 9360 | 58 | sì | sì |
| FSVENT560/4 | 560 | 4 | 0,9 | 80 | 12600 | 62 | sì | sì |
| FSVENT630/4 | 630 | 4 | 1,8 | 90L | 18000 | 67 | no | sì |
| FSVENT630/4A | 630 | 4 | 1,32 | 90S | 17280 | 65 | sì | no |
| FSVENT630/4B | 630 | 4 | 1,8 | 90L | 18000 | 66 | sì | no |
| FSVENT710/4A | 710 | 4 | 2,53 | L90L | 25200 | 72 | sì | sì |
| FSVENT710/4B | 710 | 4 | 3,6 | 100L | 27000 | 74 | sì | sì |
| FSVENT800/4A | 800 | 4 | 3,6 | 100L | 34560 | 74 | sì | sì |
| FSVENT800/4B | 800 | 4 | 4,8 | 112M | 36540 | 74 | sì | sì |
| FSVENT800/4C | 800 | 4 | 6,6 | 132M-S | 40680-38880 | 75 | sì | sì |
| FSVENT900/4A | 900 | 4 | 6,6 | 132M-S | 46800-47528 | 77 | sì | sì |
| FSVENT900/4B | 900 | 4 | 8,63 | 132S-M | 53640-52200 | 78 | sì | sì |
| FSVENT1000/4A | 1000 | 4 | 8,63 | 132S-M | 63360-61020 | 81 | sì | sì |
| FSVENT1000/4B | 1000 | 4 | 13,2 | 160M | 75960-72540 | 81 | sì | sì |
| FSVENT1000/4C | 1000 | 4 | 18 | 160L | 78120 | 83 | sì | sì |

### F300 (300° 2H), SHORT BODY (DUAL PURPOSE FUNCTIONING S1 ACCORDING TO ERP 2015)

| DESCRIPTION | Diameter | POLES | Nominal Power | Actuator size | Max capacity | Sound pressure level | available versions | |
|---|---|---|---|---|---|---|---|---|
| | mm | | kW | | m3/h | dBA @ 3m max | F300 (300° C 2h) | F400 (400° C 2h) |
| FSVENT500/2 | 500 | 2 | 3,45 | L90L | 15660 | 75 | sì | no |
| FSVENT500/4 | 500 | 4 | 0,66 | 80 | 8280-5760 | 57 | sì | sì |
| FSVENT560/4 | 560 | 4 | 0,9 | 80 | 12600-12780 | 63 | sì | sì |
| FSVENT630/4 | 630 | 4 | 1,8 | 90L | 18000 | 67 | no | sì |
| FSVENT630/4A | 630 | 4 | 1,32 | 90S | 17280 | 65 | sì | no |
| FSVENT630/4B | 630 | 4 | 1,8 | 90L | 18000 | 66 | sì | no |
| FSVENT710/4A | 710 | 4 | 2,53-2,64 | L90L-100L | 24500-25200 | 72 | sì | sì |
| FSVENT710/4B | 710 | 4 | 3,6 | 100L | 27000 | 74 | sì | sì |
| FSVENT800/4A | 800 | 4 | 3,6 | 100L | 34560 | 74 | sì | sì |
| FSVENT800/4B | 800 | 4 | 4,8 | 112M | 36540 | 74 | sì | sì |
| FSVENT800/4C | 800 | 4 | 6,6 | 132M-S | 40680-37440 | 75 | sì | sì |
| FSVENT900/4A | 900 | 4 | 6,6 | 132M-S | 46800-47520 | 77 | sì | sì |
| FSVENT900/4B | 900 | 4 | 8,63 | 132S-M | 53640-50400 | 78 | sì | sì |
| FSVENT1000/4A | 1000 | 4 | 8,63 | 132S-M | 63360-61020 | 81 | sì | sì |
| FSVENT1000/4B | 1000 | 4 | 13,2 | 160M | 75960-72540 | 81 | sì | sì |
| FSVENT1000/4C | 1000 | 4 | 18 | 160L | 78120 | 83 | sì | sì |